Southern California Edison High-Penetration PV Integration Project

SYSTEMS INTEGRATION

Hi-Pen PV Distribution Modeling

Advanced Modeling Tools to Complete High-Pen PV Integration Studies

Three procedures for determining impacts of interconnecting PV

1. Generation Time Series Analysis
- Movement/operation of utility control equipment

2. Generation Impact Analysis
- Determines the four most important time point for analysis
  - Max Load Point
  - Low Load Point
  - Max PV Point
  - Max Difference Point
- Analyze the loss and return of generation with and without regulation
- Analyze PV power factor settings

3. Generation Fault Analysis
- Screening & fault studies

PV/DER Impact Analysis: Generator Setup

Multiple Generation Levels simulates the lost and restoration of generation over a range w/wo regulation in evenly divided steps

Run Specific Generation Levels simulates a single percentage loss for all PV and a percentage of return of generation level.

Scale Time Varying Generation to Rated Values scales all generation from their time varying output to rated values

Power Factor Setup simulates range of inverter power factors for each study

Voltage Limit Setup voltage deviations for lost or restoration of PV generation.

Fault Setup will run fault analysis with and without PV generation.

Simulation Time Setup

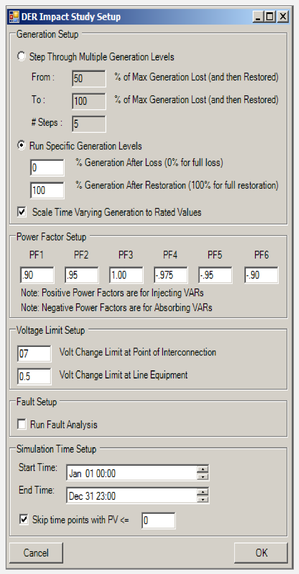

Fig. 1 Setup dialog for PV integration impact study

Study Output and Simulation Results

An annual assessment of the significant time points.

Voltage Impacts	Device Movement	Reverse flow
Protection concerns	Islanding	Efficiency/losses

Excel Workbook Output Tabs

• Min Load	Peak Load	Max PV
• Max Diff	Rev Flow	Ph. Imbalance Flow
• Ph. Imbalance CustV	Max Fault	Summary Results

An example output is shown below:

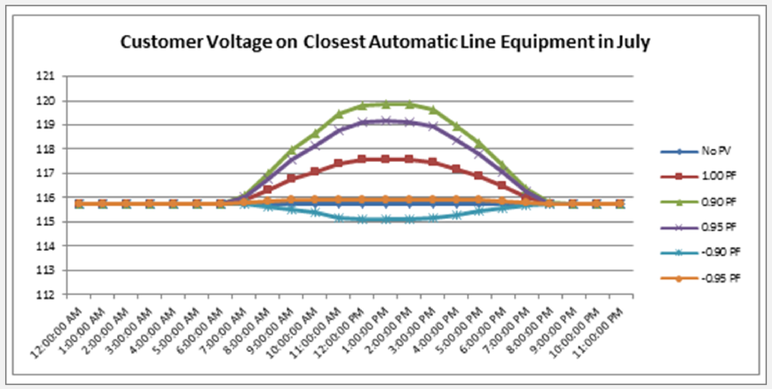

Fig. 2 Line regulator voltage plot for various PV inverter power factor (PF)

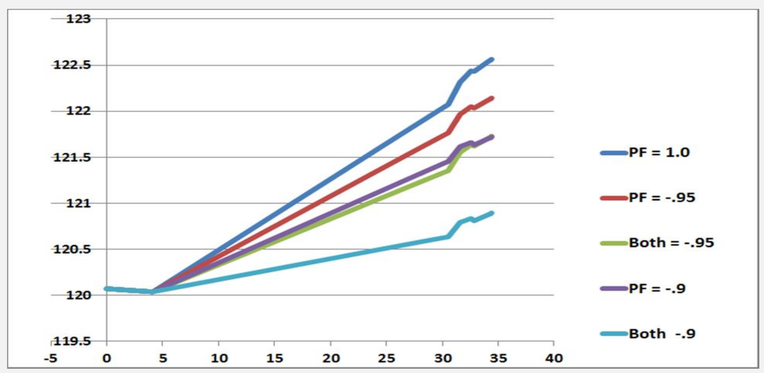

Fig. 3 Min Load Cust V distance plot, feeder to new 1.5 MW PV POI and existing 2MW

PHIL PV Inverter Testing

Evaluation of PV Inverter Advanced Functionality and PV Impact on the Distribution System

Objectives:

1. **Demonstrate** adv. Functionality of PV inverters
2. **Quantify** the PV impact of the distribution circuit
3. **Proof -of-concept** for PHIL PV inverter testing

PHIL Testing Partners: SUNGRIN

Methodology:

- Use PHIL to emulate AC grid connection and PV array
- Evaluate multiple irradiance profiles and POI locations
- Goal: replicate real-world test conditions in the lab

PHIL Setup:

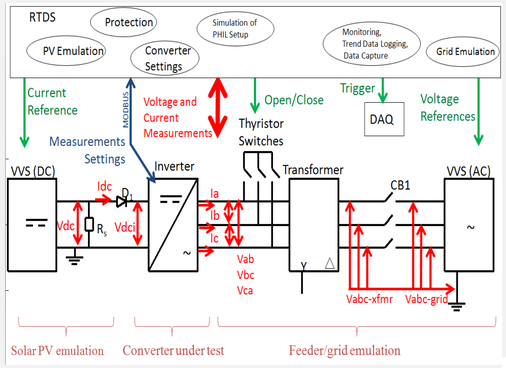

Fig. 4 PHIL PV inverter testing setup diagram

Fig. 4 shows the connection of the inverter under test to the real-time digital simulator (RTDS) and the two variable voltage sources (VVS) used to implement the PHIL system. The a detailed model of one of the SCE study feeders was used to emulate the grid connection within the RTDS. The RTDS also implemented all testing protection functions and emulated the response of the DC PV array powering the inverter.

Testing Output:

Fig. 5 shows a strip-chart view of one of the PHIL experiments completed. The PV inverter in this experiment was operating with a 0.85 inductive power factor. As the PV resource varies it can be seen in the bottom chart that both the real and reactive power vary as expected in constant power factor operation.

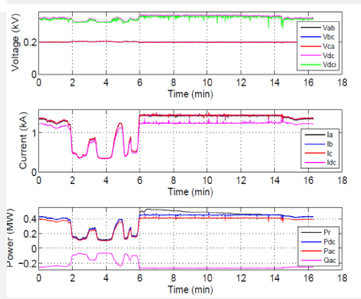

Fig. 5 Test data for moderate irradiance variability and a PF or 0.85

SunShot U.S. Department of Energy

Project Team Members: NREL National Renewable Energy Laboratory; Southern California Edison An EDISON INTERNATIONAL® Company; edd; Satcon; Quanta Technology; Clean Power Research

Project Sponsors: U.S. Department of Energy; Energy Efficiency & Renewable Energy; State of California