Module Embedded Micro-inverter Smart Grid Ready Residential Solar Electric System

GE Global Research
Maja Harfman-Todorovic

SYSTEMS INTEGRATION

TECHNOLOGY SUMMARY

Develop and demonstrate power electronics technologies that address micro-inverter system limitations and achieve project objectives:

Objective 1—An innovative, power inverter topology that provides state-of-the art efficiency, and 20+ year reliability, and support for bi-directional power flow (future reactive power) without added cost.

Objective 2—Integration of micro-inverter and PV module that a) accentuates dual use of the module metal frame as a large area heat spreader reducing operating temperature and heat sink cost, and b) eliminates redundant wiring and connectors.

Objective 3—Centralization of a subset of micro-inverter smart grid and safety functions into an intelligent back-feed capable circuit breaker that can protect the dedicated photovoltaic (PV) circuit and provide failsafe anti-islanding protection.

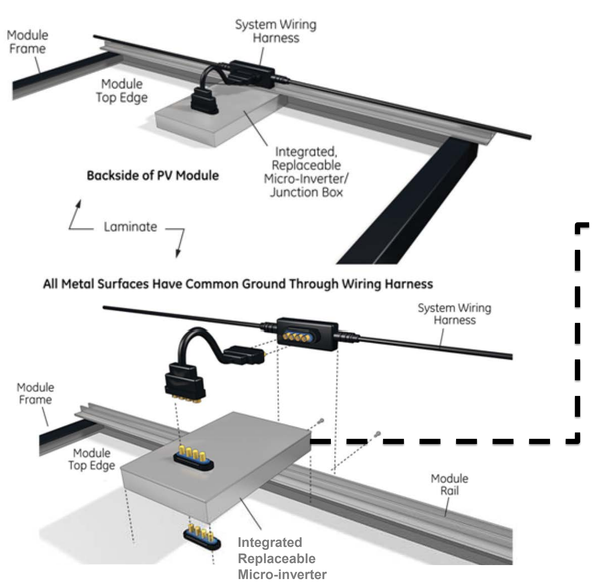

Frame integrated micro-inverter with plug and play interconnections

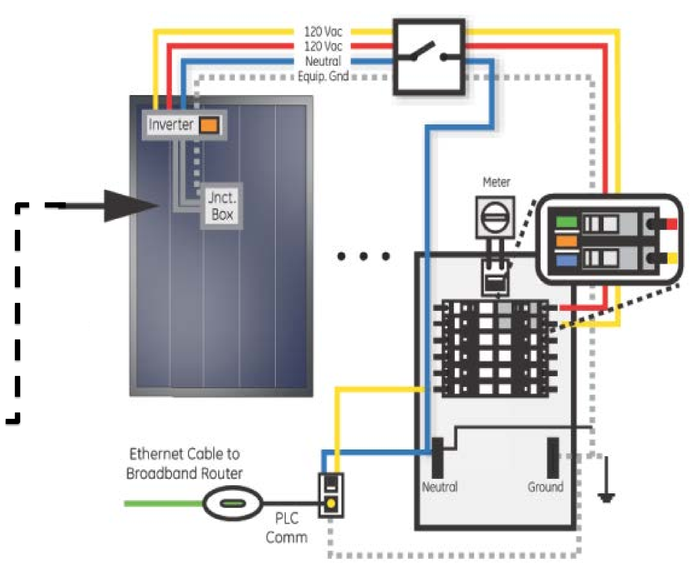

Safety and protection at the feeder circuit level through intelligent breaker

KEY PERSONNEL

Luis Garces, Michael Schutten, Fengfeng Tao, Eladio Delgado, Xinhui Wu, Lei Wang, Neil Johnson – GE Global Research

Mark Johnson, Don Marabell, Scott Hall – GE Industrial Systems Lineage Power, GE Industrial Solutions

Period of performance:36 months

KEY MILESTONES & DELIVERABLES

Year 1	• Micro-inverter design meets cost, efficiency, and form factor targets (i.e. 96% efficiency, $0.25/W cost reduction, 20+ year reliability, frame/rack-integrated) • Lab demonstration of breadboard micro-inverter functionalities including Volt/VAR control using PV emulators • System design and benchmark testing of centralized safety and smart grid functionalities for an integrated breadboard micro-inverter and a circuit breaker
Year 2	• Functionality and compliance (UL1741 and IEEE1547) test results for micro-inverter prototypes • Integrated “ACPV” (AC Photovoltaic) module system testing to demonstrate that performance targets are met • Assessment to move to new product introduction toward commercialization
Year 3	• Pilot production of 2.5 kW micro-inverters systems • Field demonstration of “ACPV” systems at two locations

TECHNOLOGY IMPACT

- $3/W total installed price vs. GE base residential system @ $4/W;
- $0.13/kWh LCOE (< average EIA 2015 retail electricity price)
- $0.10/W (30%) reduction of microinverter cost, and >$0.25/W reduction of installed price;
- Safety, communication and grid support functions including Volt/VAR support